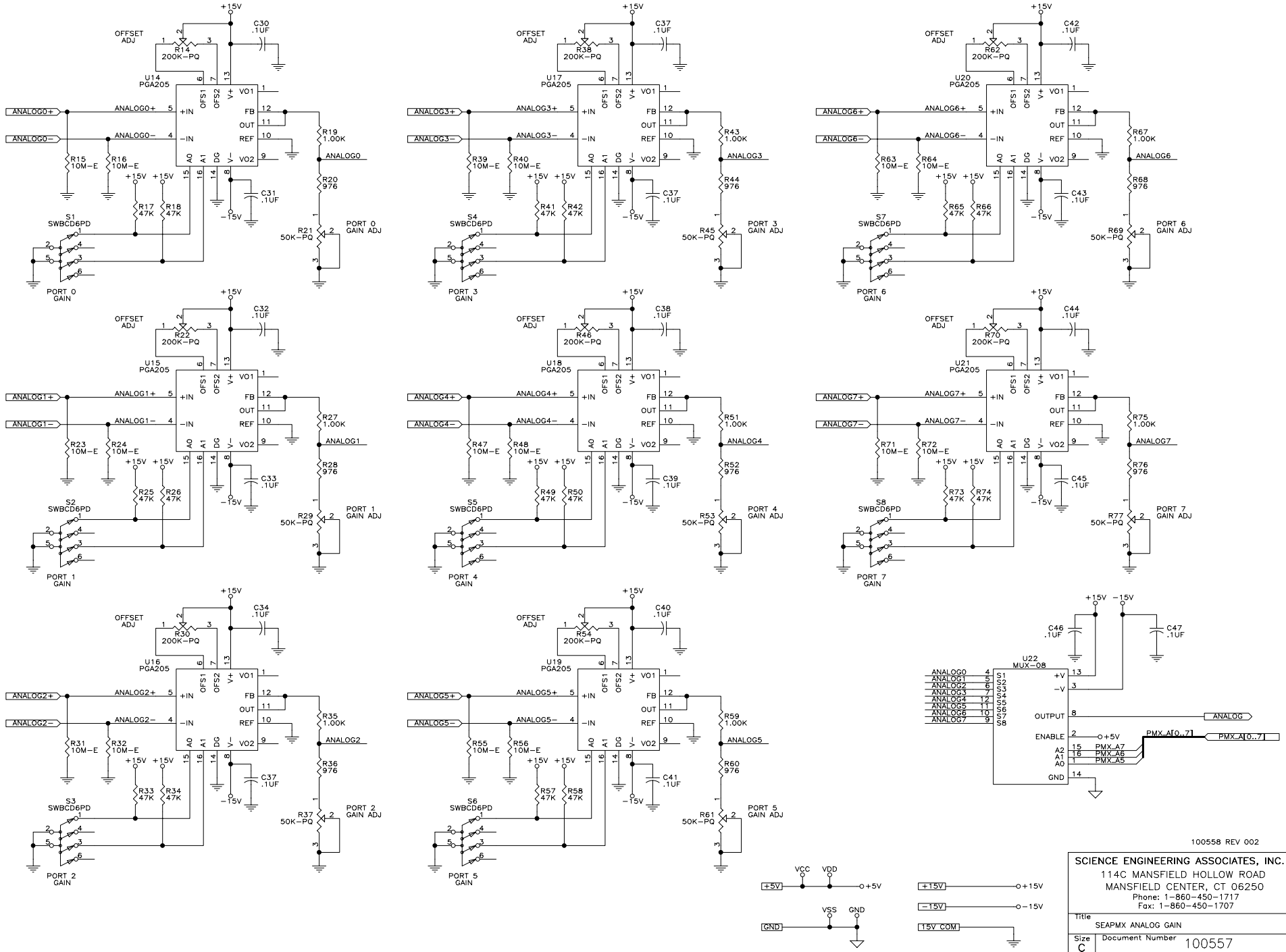
U14 PGA205
U15 PGA205
U16 PGA205
U17 PGA205
U18 PGA205
U19 PGA205
U20 PGA205
U21 PGA205
OFFSET ADJ
R14 200K-PQ
R22 200K-PQ
R30 200K-PQ
R38 200K-PQ
R46 200K-PQ
R54 200K-PQ
R62 200K-PQ
R70 200K-PQ
C30 .1UF
C32 .1UF
C34 .1UF
C37 .1UF
C38 .1UF
C40 .1UF
C42 .1UF
C44 .1UF
C31 .1UF
C33 .1UF
C37 .1UF
C39 .1UF
C41 .1UF
C43 .1UF
C45 .1UF
+15V
-15V
ANALOG0+
ANALOG0-
ANALOG1+
ANALOG1-
ANALOG2+
ANALOG2-
ANALOG3+
ANALOG3-
ANALOG4+
ANALOG4-
ANALOG5+
ANALOG5-
ANALOG6+
ANALOG6-
ANALOG7+
ANALOG7-
ANALOG0
ANALOG1
ANALOG2
ANALOG3
ANALOG4
ANALOG5
ANALOG6
ANALOG7
R15 10M-E
R16 10M-E
R23 10M-E
R24 10M-E
R31 10M-E
R32 10M-E
R39 10M-E
R40 10M-E
R47 10M-E
R48 10M-E
R55 10M-E
R56 10M-E
R63 10M-E
R64 10M-E
R71 10M-E
R72 10M-E
R17 47K
R18 47K
R25 47K
R26 47K
R33 47K
R34 47K
R41 47K
R42 47K
R49 47K
R50 47K
R57 47K
R58 47K
R65 47K
R66 47K
R73 47K
R74 47K
R19 1.00K
R20 976
R27 1.00K
R28 976
R35 1.00K
R36 976
R43 1.00K
R44 976
R51 1.00K
R52 976
R59 1.00K
R60 976
R67 1.00K
R68 976
R75 1.00K
R76 976
R21 50K-PQ
R29 50K-PQ
R37 50K-PQ
R45 50K-PQ
R53 50K-PQ
R61 50K-PQ
R69 50K-PQ
R77 50K-PQ
PORT 0 GAIN ADJ
PORT 1 GAIN ADJ
PORT 2 GAIN ADJ
PORT 3 GAIN ADJ
PORT 4 GAIN ADJ
PORT 5 GAIN ADJ
PORT 6 GAIN ADJ
PORT 7 GAIN ADJ
S1 SWBCD6PD
S2 SWBCD6PD
S3 SWBCD6PD
S4 SWBCD6PD
S5 SWBCD6PD
S6 SWBCD6PD
S7 SWBCD6PD
S8 SWBCD6PD
PORT 0 GAIN
PORT 1 GAIN
PORT 2 GAIN
PORT 3 GAIN
PORT 4 GAIN
PORT 5 GAIN
PORT 6 GAIN
PORT 7 GAIN
U22 MUX-08
C46 .1UF
C47 .1UF
OUTPUT
ENABLE
GND
ANALOG
PMX_A[0..7]
PMX_A7
PMX_A6
PMX_A5
+5V
VCC
VDD
VSS
GND
15V COM
100558 REV 002
SCIENCE ENGINEERING ASSOCIATES, INC.
114C MANSFIELD HOLLOW ROAD
MANSFIELD CENTER, CT 06250
Phone: 1-860-450-1717
Fax: 1-860-450-1707
Title
SEAPMX ANALOG GAIN
Size C
Document Number 100557
Rev E
Date 24-Apr-2008
Sheet 4 of 8